ISO TECH	H1 12V 55W Miradior	13-Aug-1999

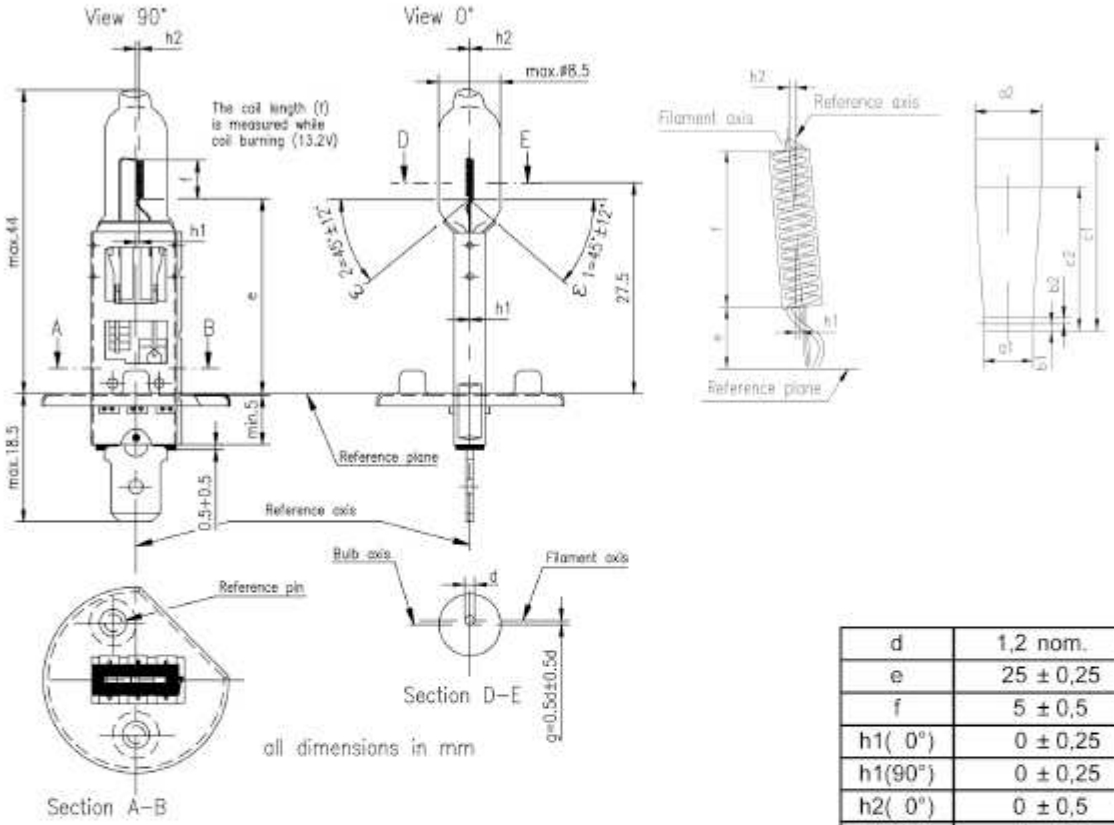

d	1,2 nom.
e	25 ± 0,25
f	5 ± 0,5
h1(0°)	0 ± 0,25
h1(90°)	0 ± 0,25
h2(0°)	0 ± 0,5
h2(90°)	0 ± 0,5

a1	a2	b1	b2	c1	c2
1,4 d	1,9 d	0,25	0,25	6	4,5

Technical data	R37
Test voltage	13,2 V
Power	68 W max.
Luminous flux	1550 lm
Lumen maintenance	90 % min.

Halogen Bulb	
H1 12V 55W Isotech	
Cap: [1]	P14,5s
Type:	HL 12
EC R37	E1 21P
DOT	none
UV Block Quartz	
ROHS: yes	

1) according to IEC 61-1 sheet 7004-46-2

Rated life at	13,2	V
- characteristic Tc	350	h min.
- B3	150	h min.

Maximum operating temperature:	800	°C max. bulb
	400	°C max. pinch
Operating position:	horizontal	